V2207.01

Let's grow together

CPD15/18/20TVL

Li-Ion Three-Wheel Counterbalance Forklift 1.5/1.8/2.0T LI-ION TECHNOLOGY

- 80 Volt System Offering Powerful Performance
- Compact Truck Size
- EP Lithium-ion Technology
- Enhanced Mast with Optimal Visibility and Stability

EP EQUIPMENT CO.,LTD
www.ep-ep.com

CE

FEATURE

80 Volt System Offering Powerful Performance

The 80 voltage 2*5.0 kW dual drive motors offer higher power efficiency than regular 48 voltage, thus The TVL series has greatly enhanced its productivity of 6 working hours per charge.

Compact Truck Size

The TVL series features a small turning radius，1450mm of CPD15TVL，1550mm of CPD18TVL and 1585mm of CPD20TVL，which makes it a perfect workhorse for small warehouses with narrow aisles within 3.5m.

Large Workspace

Due to the compact size of EP lithium battery and the ergonomic configuration of the control levers and the foot brake pedal, the small truck offers spacious legroom of 394mm and delivers the best in operation comfort.

EP Lithium-ion Technology

The TVL series comes with a EP in-house Li-ion battery and a 35A single phase integrated charger with 16amp plug allowing the truck to be charged at any power outlets. The Li-ion battery and the advantage of onboard charging make it ideal for forklift rental business.

Enhanced Mast with Optimal Visibility and Stability

The TVL series adopts the same high-strengthened mast of CPD20L2, offering the best all-around visibility and great stability with less wobbling even fully loaded.

Li-Ion Three-Wheel Counterbalance Forklift 1.5/1.8/2.0T

CPD15/18/20TVL

Distinguishing mark	1.1	Manufacturer			EP	EP	EP
	1.2	Model designation			CPD15TVL	CPD18TVL	CPD20TVL
	1.3	Drive			Electric	Electric	Electric
	1.4	Operator type			Seated	Seated	Seated
	1.5	Load capacity	Q	kg	1500	1800	2000
	1.6	Load center distance	c	mm	500	500	500
	1.8	Load distance，centre of drive axle to fork	x	mm	420	420	420
	1.9	Wheelbase	y	mm	1230	1330	1330
Service weight	2.1	Service weight		kg	2950	3269	3429
	2.2	Axle loading, laden front/rear		kg	3928/522	4415/654	4745/684
	2.3	Axle loading, unladen front/rear		kg	1305/1645	1368/1901	1359/2070
Tyres/chassis	3.1	Tyre type			Solid	Solid	Solid
	3.2	Tyre size, front			18X7-8	18X7-8	200/50-10
	3.3	Tyre size, rear			15X4.5-8	15X4.5-8	15X4.5-8
	3.5	Wheels, number front/rear (x=drive wheels)		mm	2X/2	2X/2	2X/2
	3.6	Tread width, front	b10	mm	943	943	969
	3.7	Tread width, rear	b11	mm	175	175	175
Dimensions	4.1	Tilt of mast/fork carriage forward/backward	α/β	°	6/7	6/7	6/7
	4.2	Retracted mast height	h1	mm	2075	2075	2075
	4.3	Free lift	h2	mm	100	100	100
	4.4	Lift height	h3	mm	3000	3000	3000
	4.5	Height, mast extended	h4	mm	4055	4055	4055
	4.7	Height of overhead guard (cabin)	h6	mm	2078	2078	2078
	4.8	Seat height/standing height	h7	mm	1050	1050	1050
	4.12	Tow coupling height	h10	mm	600	600	600
	4.19	Overall length	l1	mm	2733	2833	3020
	4.20	Length to face of forks	l2	mm	1813	1913	1950
	4.21	Overall width	b1/b2	mm	1070	1070	1170
	4.22	Fork dimensions	s/e/l	mm	100X40X920	100X40X920	122X40X1070
	4.23	A,B Fork carriage class/type A, B			2A	2A	2A
	4.24	Fork carriage width	b3	mm	1040	1040	1040
	4.31	Ground clearance, laden, below mast	m1	mm	89	89	89
	4.32	Ground clearance, center of wheelbase	m2	mm	92	92	92
	4.34.1	Aisle width for pallets 1000×1200 crossways	Ast	mm	3175	3275	3315
	4.34.2	Aisle width for pallets 800×1200 lengthways	Ast	mm	3300	3400	3435
	4.35	Turning radius	Wa	mm	1450	1550	1585
Performance data	5.1	Travel speed, laden/unladen		km/h	13/14	13/14	13/14
	5.2	Lifting speed, laden/unladen		m/s	0.33/0.5	0.4/0.5	0.38/0.48
	5.3	Lowering speed, laden/unladen		m/s	0.55/0.55	0.55/0.55	0.53/0.53
	5.5	Drawbar pull, laden/unladen		N	——	——	——
	5.6	Max. drawbar pull, laden/unladen		N	——	——	——
	5.8	Max. gradeability, laden/unladen		%	10/15	10/15	10/15
	5.10	Service brake			Hydraulic	Hydraulic	Hydraulic
	5.11	Parking brake			Mechanical	Mechanical	Mechanical
Electric-engine	6.1	Drive motor rating S2 60 min		kW	5.0X2	5.0X2	5.0X2
	6.2	Lift motor rating at S3 15%		kW	11	11	11
	6.4	Battery voltage/nominal capacity		V/Ah	80V/150AH	80V/205AH	80V/205AH
	6.5	Battery weight		kg	220	220	220
Addition data	8.1	Type of drive control			AC	AC	AC
	10.5	Steering design			Hydraulic	Hydraulic	Hydraulic
	10.7	Sound pressure level at the driver's ear		dB(A)	68	70	74

If there are improvements of technical parameters or configurations, no further notice will be given.
The diagram shown may contain non-standard configurations.

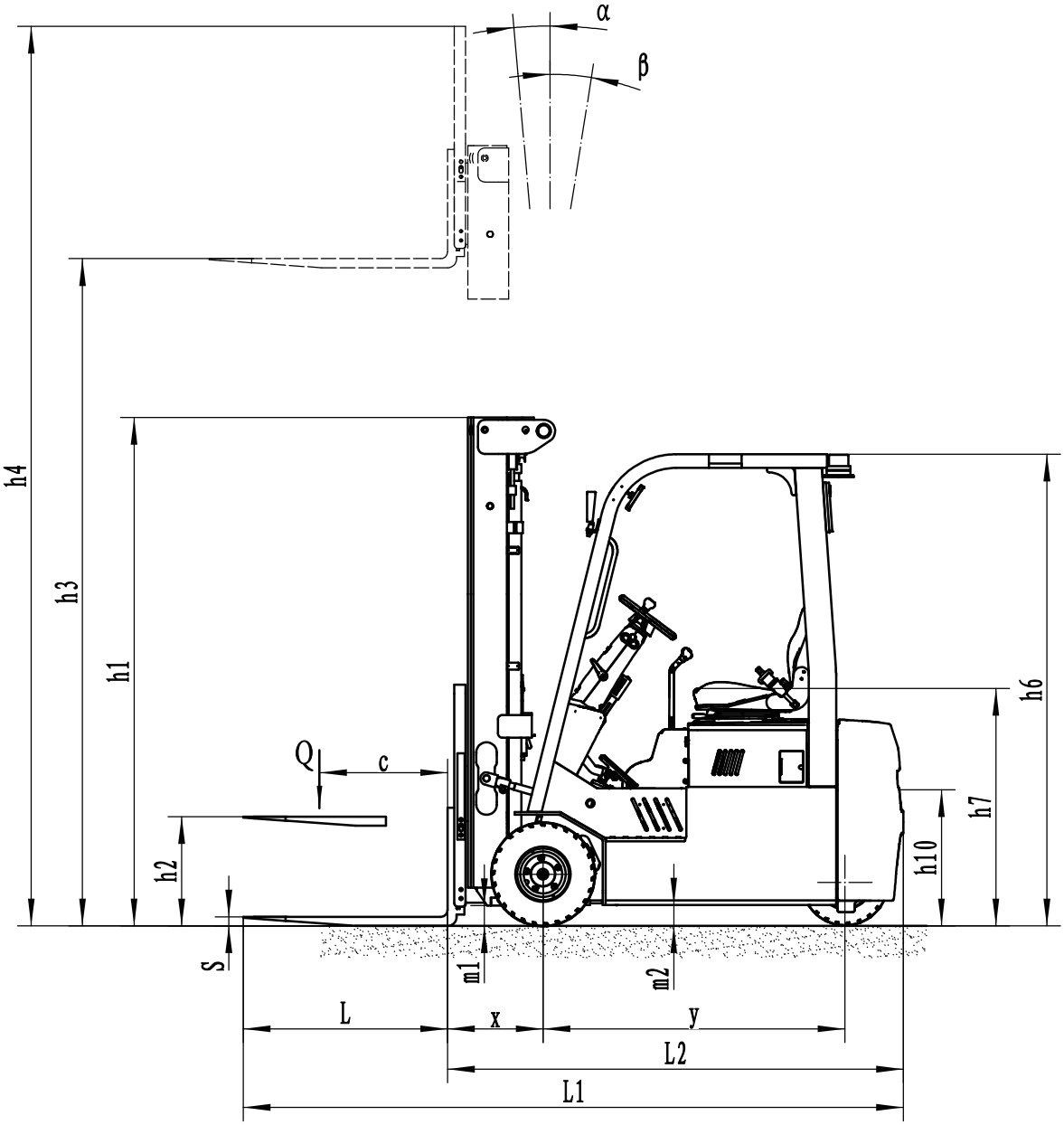
α
β
h4
h3
h1
h6
h7
h10
Q
c
h2
S
m1
m2
L
x
y
L2
L1

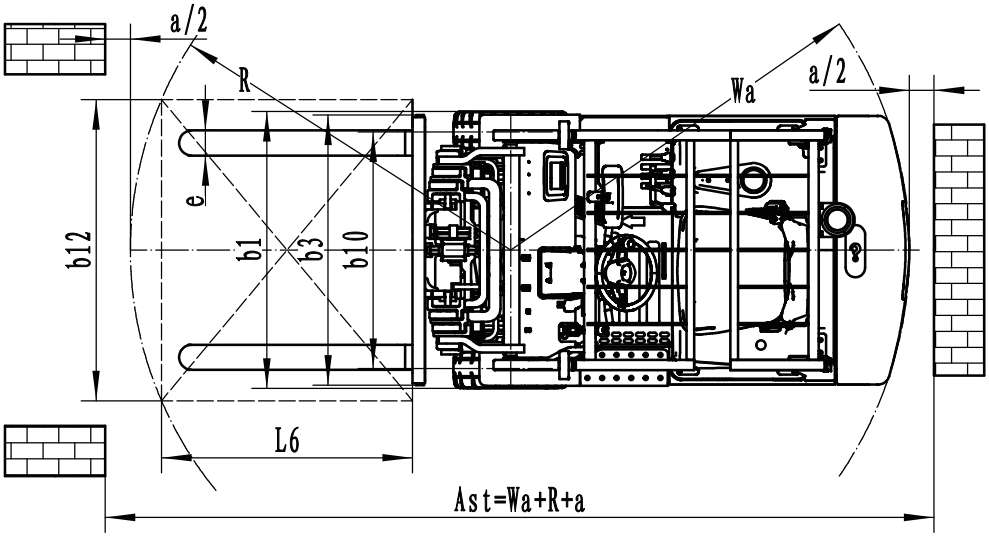
a/2
R
Wa
a/2
e
b12
b1
b3
b10
L6
Ast=Wa+R+a

Mast Option

CPD15TVL

Mast types	Lift height (h3)	Height, Mast			Height,Free lift(h2)	
		Height, mast lowered(h1)	Height, mast extended(h4)		No backrest	With backrest
			No backrest	With backrest		
	mm	mm	mm	mm	mm	mm
2-Standard Mast	3000	2075	3740	4055	100	100
	3600	2375	4340	4655	100	100
	4000	2455	4740	5055	100	100
3-Free Mast	4500	2140	5240	5555	1430	1115
	4800	2240	5540	5855	1530	1215
	5000	2305	5740	6055	1595	1280

CPD18/20TVL

Mast types	Lift height (h3)	Height, Mast			Height,Free lift(h2)	
		Height, mast lowered(h1)	Height, mast extended(h4)		No backrest	With backrest
			No backrest	With backrest		
	mm	mm	mm	mm	mm	mm
2-Standard Mast	3000	2075	3740	4055	100	100
	3600	2375	4340	4655	100	100
	4000	2455	4740	5055	100	100
3-Free Mast	4500	2140	5240	5555	1430	1115
	4800	2240	5540	5855	1530	1215
	5000*	2305	5740	6055	1595	1280
	5500*	2475	6240	6555	1765	1450
	6000*	2690	6740	7055	1980	1665

Note*

CPD18TVL	Lift height (h3)mm	Tyre size, front	Overall width (b1/b2)mm
3-Free Mast	5000	200/50-10	1170
	5500		
	6000		

*The parameters of CPD18TVL will be altered in tyre size and overall width, when choosing triplex mast with lift height over 5000mm.

RATED CAPACITIES AND LOAD CENTERES GRAPH

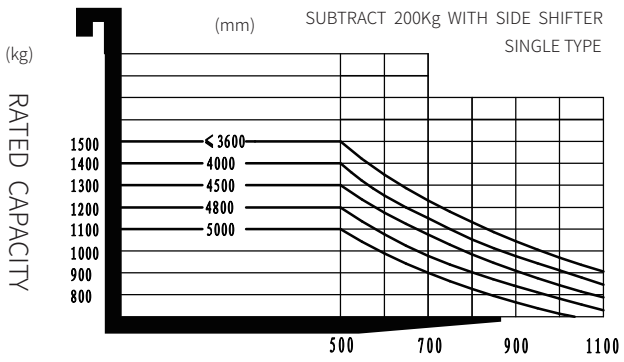

CPD15TVL LOAD CENTRE POSITION (mm)

RATED CAPACITIES AND LOAD CENTERES GRAPH

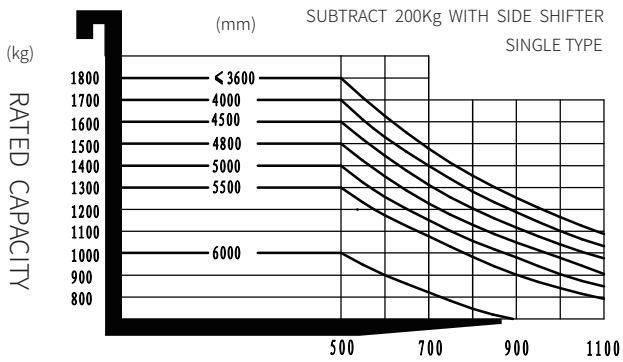

CPD18TVL LOAD CENTRE POSITION (mm)

RATED CAPACITIES AND LOAD CENTERES GRAPH

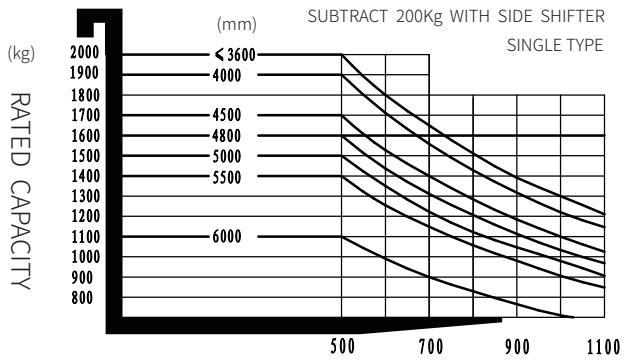

CPD20TVL LOAD CENTRE POSITION (mm)

Option

No.	Optional items	CPD15TVL	CPD18TVL	CPD20TVL
1.1	Fork dimension	●100*40*920○100*40*1070○100*40*1100○100*40*1150 ○100*40*1220○100*40*1370○100*40*1520○100*40*1800		●122*40*1070○122*40*920 ○122*40*1150○122*40*1220 ○122*40*1370○122*40*1500 ○122*40*1600○122*40*1700 ○122*40*1820○122*40*1900 ○122*40*2000○122*40*2200
1.4	Fork carriage width	●1040mm○Yes and can be customized		
1.5	Fork carriage height	●1067mm (42in) ○1220mm (48in) ○1520mm (60in) ○Yes and can be customized		
2.5	Front wheel material	● Solid○ Non-marking solid		
2.6	Rear wheel material	● Solid○ Non-marking solid		
2.7	Battery capacity	●150Ah	●205Ah	
2.8	Charger	●80V-35A single-phase integrated ○80V-60A 3-phase integrated ○80V-35A single-phase external ○80V-65A 3-phase external	●80V-35A single-phase integrated ○80V-60A 3-phase integrated ○80V-35A single-phase external ○80V-65A 3-phase external ○80V-100A 3-phase external	●80V-35A single-phase integrated ○80V-60A 3-phase integrated ○80V-35A single-phase external ○80V-65A 3-phase external ○80V-100A 3-phase external
2.9	Battery indicator	●With time		
2.10	Seat type	●Regular ○Premium ○Suspension ○Suspension+seatbelt logic switch	●Regular ○Premium ○Suspension ○Suspension+seatbelt logic switch	●Regular ○Premium ○Suspension ○Suspension+seatbelt logic switch
2.11	Attachments	●No○Built-in sideshifter○External shifter○Adjustable fork		
2.13	Traction pin	●Yes		
3.5	Front lamp	●LED		
3.6	Rear lamp	●No○LED		
3.7	Warning lamp	●Yes		
3.8	Steering lamp	●Yes		
3.9	Blue lamp	●No○2 front○1 rear○2 front +1 rear		
3.10	Area warning lamp	●No○1 left + 1 right (Red)		
3.11	Rearview mirror	●1 in the middle○Add 1 rearview mirror on both sides		
3.12	Buzzer	●Yes		
3.17	OPS system	●Yes		
3.23	Telematics	●No○Yes and not customized		
4.3	Cabin	●No		
4.9	Heater	●No		
Note:	●Standard ○ Optional - Inconformity			

Dimension

CPD15TVL Length to face of forks: 1813mm(L2) overall width: 1070mm(b1/b2)

CPD18TVL Length to face of forks: 1913mm(L2) overall width: 1070mm(b1/b2)

CPD20TVL Length to face of forks: 1950mm(L2) overall width: 1170mm(b1/b2)