Let's grow together

MAX-5

Fit Actual Needs and Costs Effectively

CPD15/20FJ5

Four-wheel Electric Forklift 1.5/2.0t

Best performance of innovation for MHE trade;
High efficient and maintenance free AC traction motor can output large torque, high gradeability and strong power;
Strong overhead guard makes safety operation;
BDI with error code function, convenient for maintenance.

EP EQUIPMENT CO.,LTD
www.ep-ep.com

CE

Four-wheel electric forklift 1.5/2.0t
CPD15/20FJ5

Distinguishing mark					
1.1	Manufacturer			EP	EP
1.2	Model designation			CPD15FJ5	CPD20FJ5
1.3	Drive unit			Electrics	Electrics
1.4	Operator type			seated	seated
1.5	rated capacity	Q	t	1.5	2
1.6	Load center distance	c	mm	500	500
1.8	Load distance，centre of drive axle to fork	x	mm	413	435
1.9	Wheelbase	y	mm	1410	1410
Weight					
2.1	Service weight （include battery）		kg	2670	3250
2.2	Axle loading, laden driving wheels /steering wheels		kg	3720/450	4690/560
2.3	Axle loading, unladen driving wheels /steering wheels		kg	1230/1440	1290/1960
Types,Chassis					
3.1	Tyre type,driving wheels /steering wheels			pneumatic	solid rubber
3.2	Tyre size, driving wheels			6.5-10-10PR	6.5-10
3.3	Tyre size, steering wheels			5.00-8-10PR	5.00-8-10PR
3.5	Wheels, number driving/steering (x=drive wheels)		mm	2x/ 2	2x/ 2
3.6	Tread, Driving wheels	b_{10}	mm	890	890
3.7	Tread, Steering wheels	b_{11}	mm	920	920
Dimensions					
4.1	Tilt of mast/fork carriage forward/backward	α/ β (°)		6/ 10	6/ 10
4.2	Height, mast lowered	h_1	mm	2170	2170
4.3	Free lift （load backrest）	h_2	mm	120	120
4.4	Lift height	h_3	mm	3000	3000
4.5	Height, mast extended	h_4	mm	4010	4010
4.7	Height of overhead guard (cabin)	h_6	mm	2170	2170
4.8	Seat height	h_7	mm	1160	1160
4.12	Tow center of pin height	h_{10}	mm	335	350
4.19	Overall length	l_1	mm	3085	3200
4.20	Length to face of forks	l_2	mm	2165	2280
4.21	Overall width	b_1/ b_2	mm	1080/1070	1080/1070
4.22	Fork dimensions	s/ e/ l	mm	40×100×920	40×100×920
4.23	Fork carriage class/type A, B			2A	2A
4.24	Fork carriage width	b_3	mm	1085	1085
4.31	Ground clearance, laden, below mast	m_1	mm	110	110
4.32	The minimum ground clearance of frame	m_2	mm	110	100
4.34.1	Aisle width for pallets 1000 × 1200 crossways	Ast	mm	3673	3780
4.34.2	Aisle width for pallets 800 × 1200 lengthways	Ast	mm	3873	3980
4.35	Turning radius	Wa	mm	2060	2145
Performance data					
5.1	Travel speed, laden/ unladen		km/ h	12/ 12.5	12/ 12.5
5.2	Lifting speed, laden/ unladen		m/ s	0.25/ 0.45	0.25/ 0.45
5.3	Lowering speed, laden/ unladen		m/ s	0.45/ 0.44	0.45/ 0.44
5.5	Drawbar pull, laden/unladen		N	——	——
5.6	Max. drawbar pull, laden/unladen (time)		N	11000	11000
5.7	Gradeability, laden/unladen		%	——	——
5.8	Max. gradeability, laden/unladen		%	10.5/ 14	10.5/14
5.10	Service brake type			Hydraulic+ Mechanical	Hydraulic+ Mechanical
	park brake type			Mechanical	Mechanical
Electric-engine					
6.1	Drive motor rating S2 60 min		kW	6	8
6.2	Lift motor rating at S3 15%		kW	7.5	7.5
6.3	The maximum allowed size battery		mm	——	——
6.4	Battery voltage/nominal capacity K5			48/385	48/450
6.5	Battery weight		kg	660	727
Addition data					
8.1	Type of drive unit			AC	AC
10.5	Steering type			——	——
10.7	Sound pressure level at the driver's ear		dB (A)	70	71

If there are improvements of technical parameters or configurations, no further notice will be given.
The diagram shown may contain non-standard configurations.

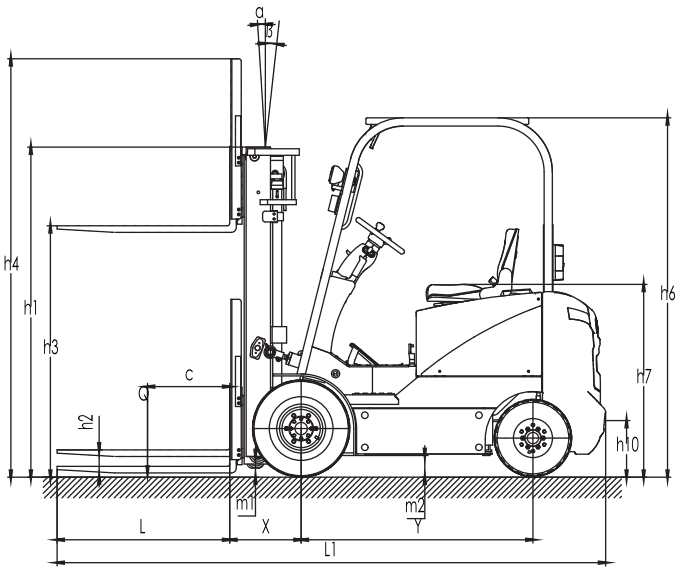

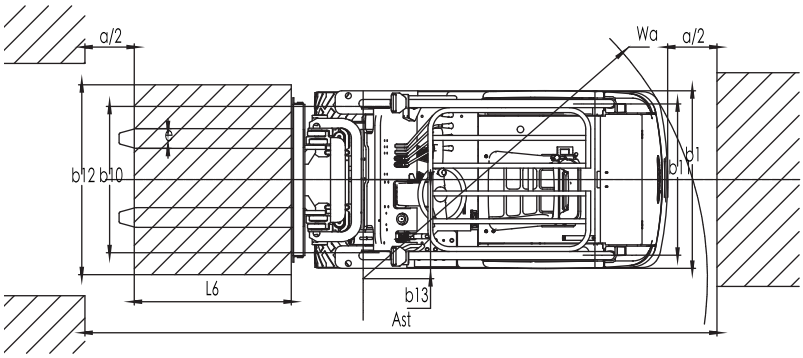

CPD15FJ5 RATED CAPACITIES GRAPH

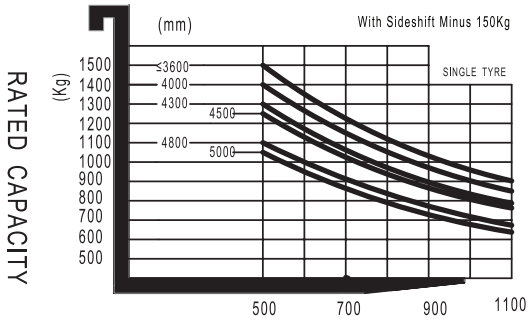

CPD20FJ5 RATED CAPACITIES GRAPH

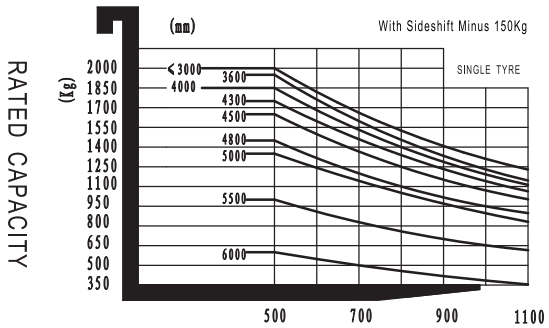

Mast Option

Tpye	Model	Max.fork height h3	Overall height			Free lift		Front Overhang X		Tilt range		Capacity			
			Lowered h1	Extended		Without backrest	With backrest h2			FWD α	BWD β	Load capacity at 500 mm			
				Without backrest	With backrest h4							Single tire		Double tire	
								1.5t	2t			1.5t	2t	1.5t	2t
		mm	mm	mm	mm	mm	mm	mm	mm	Deg	Deg	kg	kg	kg	kg
Duplex ZT	2W200	2000	1480	2510	3010	120	120	413	435	6	10	1500	2000	1500	2000
	2W250	2500	1730	3010	3510	120	120	413	435	6	10	1500	2000	1500	2000
	2W270	2700	1830	3210	3710	120	120	413	435	6	10	1500	2000	1500	2000
	2W300	3000	1980	3510	4010	120	120	413	435	6	10	1500	2000	1500	2000
	2W330	3300	2130	3810	4310	120	120	413	435	6	10	1500	2000	1500	2000
	2W350	3500	2230	4010	4510	120	120	413	435	6	10	1500	2000	1500	2000
	2W360	3600	2280	4110	4610	120	120	413	435	6	10	1500	2000	1500	2000
	2W400	4000	2530	4510	5010	120	120	413	435	6	10	1400	1900	1500	2000
	2W430	4300	2680	4810	5310	120	120	413	435	6	10	1300	1800	1400	1950
	2W450	4500	2780	5010	5510	120	120	413	435	6	10	1250	1600	1350	1900
Duplex ZZ	2F250	2500	1765	3010	3510	1255	755	413	435	6	10	1500	2000	1500	2000
	2F270	2700	1865	3210	3710	1355	855	413	435	6	10	1500	2000	1500	2000
	2F300	3000	2015	3510	4010	1505	1005	413	435	6	10	1500	2000	1500	2000
	2F330	3300	2165	3810	4310	1655	1155	413	435	6	10	1500	2000	1500	2000
	2F360	3600	2315	4110	4610	1805	1305	413	435	6	10	1500	2000	1500	2000
	2F400	4000	2515	4510	5010	2005	1505	413	435	6	10	1400	1850	1500	2000
Triplex DZ	3F430	4300	1985	4810	5310	1475	975	440	450	6	6	1300	1750	1350	1900
	3F450	4500	2035	5010	5510	1525	1025	440	450	6	6	1250	1650	1300	1800
	3F480	4800	2135	5310	5810	1625	1125	440	450	6	6	1100	1450	1200	1700
	3F500	5000	2200	5510	6010	1690	1190	440	450	6	6	1050	1350	1150	1550
	3F550	5500	2370	6010	6510	1860	1360	440	450	3	6	/	1000	950	1250
	3F600	6000	2585	6510	7010	2075	1575	440	450	3	6	/	600	750	1000

1.The parameters in the table are the standard model, for more information please contact us.
2.The parameters are subject to change without notice.

Option

	Options		CPD15FJ5/CPD20FJ5
1	Fork length		○
2	Fold fork		○
3	Battery capacity		—
4	Import battery		—
5	Solid rubber tire		○
6	Environmental solid tire		○
7	Cold storage		○
8	Lateral change battery		—
9	fork weighing system		○
10	Overhead guard		○
11	Mast options		○
12	Attachments		○
13	Built in side shift		○
14	Proportional value		—
17	Light	LED front light	○
28		Back light	○
22		Warning light	○
18	Fire extinguisher		○
19	Water auto-fillingsystem		○
20	Seat		○
21	Seat switch		○
23	Cockpit	With fan heater	—
25		With front windshield wiper	—
26		With rear windshield wiper	—
16		Cockpit	—
24	Doulbe front wheel		○
27	Rearview		○
29	OPS system		○
30	Backrest width		○
31	Environmental solid tire		—
32	Air fan		○
33	Charging voltage		○
35	Drive-in Rack		○

Note: ● standard ○ option — NA